OPERATOR'S AND PARTS MANUAL

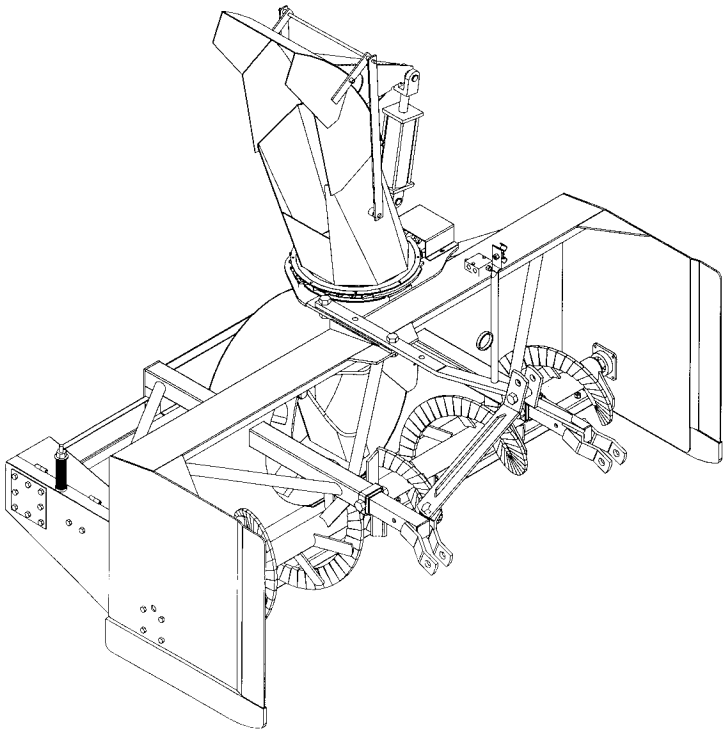

SNOWBLOWER

SA92I MODEL

SERIAL NO. 2006775 AND UP

OM 0289-A
06/00

BER-VAC

by RAD Technologies Inc.

TABLE OF CONTENT

INTRODUCTION – TO THE PURCHASER 3

SAFETY PRECAUTIONS 4
- Before Operation 4
- Notice 5
- The Snowblower 5
  - Before Operation 5
  - Snowblower operation 6
- The Tractor 7
  - General Information 7
  - Operating the Tractor 7
  - During Operation 7
- Maintenance 8
- Transporting 8
- Storage 8

DECALS 9

ASSEMBLY 10
- Snowblower Assembly 10
- D riveline Installation 10
  - Detaching Snowblower from Tractor 11
  - Three Point Hitch Installation 11
- S nowblower Installation 11
  - Hydraulic Rotation by Motor 12
  - Rear Hydraulic Blade 8106 Installation - Option 13
  - Adjustment of Tivar Cutting Edge for Rear Hydraulic Blade 13

OPERATION 14
- General Preparation 14
- Operating Controls 14
  - Raising and Lowering the Snowblower 14
- D rive Shaft Operation 14
- D eflector Adjustment 14
  - Work and Travel Speed 14
- Snow Removal Methods 15

MAINTENANCE 16
- Maintenance 16
- Ti re Pressure 16
- S torage 16
- Lubri cation 16

TABLE OF CONTENT

PARTS 17
Introduction 17
Snowblower SA92I 18
Three Point Hitch 20
Semi-Industrial Chute – 9492 - Option 21
Hydraulic Rotation 22
Gearbox – 665459 23
Driveline - 665227 24
Rear Hydraulic Blade 8106 - Option 25

WARRANTY 26

TORQUE SPECIFICATION TABLE 27

INTRODUCTION

TO THE PURCHASER

All products are designed to give safe, dependable service if they are operated and maintained according to instructions. **Read and understand this manual before operation.**

This manual has been prepared to assist the owner and operators in the safe operation and suitable maintenance of the equipment. The information was applicable to products at the time of manufacture and does not include modifications made afterwards.

Read and understand this operator's manual before attempting to put equipment into service. Familiarize yourself with the operating instructions and all the safety recommendations contained in this manual and those labeled on the equipment and on the tractor. Follow the safety recommendations and make sure that those with whom you work follow them.

Illustrations

The illustrations may not necessarily reproduce the full detail and the exact shape of the parts or depict the actual models, but are intended for reference only.

Direction Reference

All references to right and left, forward or rearward, are from the operator's seat, facing the steering wheel.

To assist your dealer in handling your needs, please record hereafter the model number and serial number of your equipment and tractor. It is also advisable to supply them to your insurance company. It will be helpful in the event that an equipment or tractor is lost or stolen.

	TRACTOR	IMPLEMENT
MODEL:		
SERIAL NUMBER:		
DATE OF PURCHASE:		
DEALER NAME:		

SAFETY PRECAUTIONS

SAFETY FIRST

This symbol, the industry's "Safety Alert Symbol", is used throughout this manual and on labels on the machine itself to warn of the possibility of personal injury. Read these instructions carefully. It is essential that you read the instructions and safety regulations before you attempt to assemble or use this unit.

DANGER : Indicates an immediately hazardous situation which, if not avoided, will result in death or serious injury.

WARNING : Indicates a potentially hazardous situation which, if not avoided, could result in death or serious injury.

CAUTION : Indicates a potentially hazardous situation which, if not avoided, may result in minor or moderate injury.

IMPORTANT : Indicates that equipment or property damage could result if instructions are not followed.

NOTE : Gives helpful information.

All products are designed to give safe, dependable service if they are operated and maintained according to instructions. **Read and understand this manual before operation**. It is the owner's responsibility to be certain anyone operating this product reads this manual, and all other applicable manuals, to become familiar with this equipment and all safety precautions. Failure to do so could result in serious personal injury or equipment damage. If you have any questions, consult your dealer.

BEFORE OPERATION

Children

Tragic accidents can occur if the operator is not alert to the presence of children. Children are generally attracted to machines and the work being done. Never assume children will remain where you last saw them.

1. Keep children out of the operating area and under the watchful eye of another responsible adult.
2. Be alert and turn machine off if children enter the work area.
3. Before and when backing, look behind for small children.
4. Never carry children while operating the machine. They may fall off and be seriously injured or interfere with the safe operation of the machine.
5. Never allow children to play on the machine or attachment even when they are turned off.
6. Never allow children to operate the machine even under adult supervision.
7. Use extra care when approaching blind corners, shrubs, trees, or other obstructions that might hide children from sight.

NOTICE

A safe operator is the best assurance against accidents. All operators, no matter how experienced they may be, should read this operator's manual and all other related manuals before attempting to operate the equipment. Please read the following section and pay particular attention to all safety recommendations contained in this manual and those labeled on the equipment and on the tractor.

THE SNOWBLOWER

Before Operation

1. Read and understand this operator's manual and tractor operator's manual. Know how to operate all controls and how to stop the unit and disengage the controls quickly.
2. Never wear loose, torn, or bulky clothing around the tractor and the snow blower. It may catch on moving parts or controls, leading to the risk of accident.
3. Before and during the snow season, thoroughly inspect the area where the equipment is to be used and remove all objects that may be thrown or cause damage to the equipment.
4. Set transmission to neutral and disengage clutch, if equipped, before starting the engine.
5. Do not operate equipment in wintertime without wearing adequate winter garments.
6. Never attempt to make any adjustments while engine is running. Read this manual carefully to acquaint yourself with the equipment as well as the tractor operator's manual. Working with unfamiliar equipment can lead to accidents. Be thoroughly familiar with the controls and proper use of the equipment.
7. Replace all missing, illegible, or damaged safety and warning decals. See list of decals in the operator's manual.
8. Do not modify or alter this equipment or any of its components, or any equipment function without first consulting your dealer.
9. Keep safety decals clean of dirt and grime.
10. Use of tire chains and rear counterweights is recommended. Weights provide the necessary balance to improve stability, traction and steering. Use only those recommended by your dealer.

SNOWBLOWER OPERATION

1. In case of a belt-driven equipment, make sure drive belt is routed properly before operation.
2. Before leaving the tractor unattended, take all possible precautions. Park the tractor/snowblower on level ground, place the transmission in neutral, set the parking brake, disengage the driving system, lower the equipment to the ground, place all levers including auxiliary control levers in neutral, shut off the engine and remove the ignition key.
3. Before starting the tractor/snow blower, remove any ice that has accumulated in the auger/fan.
4. Watch carefully for foreign objects that could enter the blower while operating.
5. Be sure the PTO switch/lever is in OFF position before starting engine.
6. Do not put hands or feet near rotation parts. Keep clear of discharge opening at all times.
7. Exercise extreme caution when operating on or crossing a gravel drive, walks, or roads. Stay alert for hidden hazards or traffic. Do not carry passengers.
8. Adjust collector-housing height to clear gravel or crushed rock surface.
9. Park the tractor/snowblower on level ground, place the transmission in neutral, set the parking brake, disengage the driving system, lower the equipment to the ground, place all levers including auxiliary control levers in neutral, shut off the engine, remove the ignition key and allow the rotating parts to stop BEFORE unclogging the collector/fan housing or chute, and making any repairs, adjustments or inspections. Use only a 36" long piece of wood to unclog blower.
10. If the snow blower starts to vibrate abnormally, stop the engine immediately and check for cause. Excessive vibration is generally a sign of trouble.

Do not run the engine indoors except when starting engine and transporting attachment in or out of building. Carbon monoxide gas is colorless, odorless and deadly.

11. Do not attempt to operate on steep slopes.
12. Never operate snow blower without guards, and other safety protective devices in place.
13. Never operate snow blower near glass enclosures, automobiles, window wells, embankments, etc., without proper adjustment of snow discharge angle.
14. Never operate machine at high transport speeds on a slippery surface.
15. Use extra caution when backing up.
16. Do not direct discharge at bystanders or animals. Ejected objects may cause injury.
17. Disengage power to auger/fan when transporting or when not in use.
18. Never operate the snowblower without good visibility and lighting.
19. Prolonged exposure to loud noise can cause impairment or loss of hearing. Wear a suitable hearing protective device such as earmuffs or earplugs to protect against objectionable or uncomfortable noises.

THE TRACTOR

General Information

1. Read the operator's manual carefully before using tractor. Lack of operating knowledge can lead to accidents.
2. Do not permit anyone but the operator to ride on the tractor. There is no safe place for extra riders.

Operating the Tractor

1. Never run the tractor engine in a closed building without adequate ventilation, as the exhaust fumes are very dangerous.
2. Never allow an open flame near the fuel tank or battery.
3. Make sure the belt shield is installed when using a belt- driven equipment and always replace the belt shield if damaged.
4. Park the tractor/snowblower on level ground, place the transmission in neutral, set the parking brake, disengage the driving system, lower the equipment to the ground, place all levers including auxiliary control levers in neutral, shut off the engine and remove the ignition key BEFORE leaving the tractor.
5. Never park the tractor on a steep slope.
6. Do not attempt to operate on steep slopes.
7. Use of tire chains and rear counterweights for better traction and stability is recommended.
8. Always drive the tractor at speeds compatible with safety, especially when operating over rough ground, crossing ditches, or when turning.
9. Handle fuel with care, as it is highly flammable.
10. Use approved fuel container.
11. Never add fuel to a running engine or a hot engine.
12. Fill fuel tank outdoors with extreme care. Never fill fuel tank indoors. Replace fuel cap securely and wipe up spilled fuel.
13. Never allow any one to operate the snowblower until they have read the manual completely and are thoroughly familiar with basic tractor and snowblower operation.
14. Make sure the tractor is counterweighted as recommended by your dealer. Weights provide the necessary balance to improve stability, traction and steering.
15. Always make sure all snowblower components are properly installed and securely fastened BEFORE operation.

During Operation

1. Do not allow any one to ride on the tractor/snowblower at any time. There is no safe place for passengers on this equipment. The operator MUST sit in the tractor seat.
2. Eye and hearing protection is recommended when operating the snowblower.
3. Operate only during daylight hours, or when the area is well lit with bright artificial light.
4. Park the tractor/snowblower on level ground, place the transmission in neutral, set the parking brake, disengage the driving system, lower the equipment to the ground, place all levers including auxiliary control levers in neutral, shut off the engine and remove the ignition key BEFORE leaving the operator's seat.
5. Inspect the snow blower after striking any foreign object to assure that all snowblower parts are safe and secure and not damaged.

MAINTENANCE

ALWAYS USE GENUINE PARTS WHEN REPLACEMENT PARTS ARE REQUIRED

1. Park the tractor/snowblower on level ground, place the transmission in neutral, set the parking brake, disengage the driving system, lower the equipment to the ground, place all levers including auxiliary control levers in neutral, shut off the engine and remove the ignition key and allow the rotating parts to stop BEFORE making any snowblower adjustments.
2. To avoid injury, do not adjust, unclog or service the snowblower with the tractor engine running. Make sure rotating components have completely stopped before leaving the operator's seat.
3. Keep the tractor/snowblower clean. Snow and ice build-up can lead to malfunction or personal injury from thawing and refreezing in garage.
4. Always wear eye protection when cleaning or servicing the snowblower.
5. Securely support tractor or any machine elements with stands or suitable blocking before working underneath. Do not rely on hydraulically supported devices for your safety. They can settle suddenly, leak down, or be accidentally lowered.
6. Make sure all shields and guards are securely in place following all service, cleaning, or repair work.
7. Do not modify or alter this equipment or any of its components or operating functions. If you have questions concerning modifications, consult with your dealer.

TRANSPORTING

1. If the tractor/equipment is to be driven on public roads, it must be equipped with an SMV (Slow Moving Vehicle) sign. Check local traffic codes that may apply to unit usage on public roads and highways in your area.
2. Be alert for all other traffic when driving the tractor/equipment on public roads or highways.

STORAGE

Before storing the snowblower, certain precautions should be taken to protect it from deterioration.

1. Clean the snowblower thoroughly.
2. Make all the necessary repairs.
3. Replace all safety signs that are damaged, lost, or otherwise become illegible. If a part to be replaced has a sign on it, obtain a new safety sign from your dealer and install it in the same place as on the removed part.
4. Repaint all parts from which paint has worn or peeled.
5. Lubricate the snowblower as instructed under **"Lubrication"** section.
6. When the snowblower is dry, oil all moving parts. Apply oil liberally to all surfaces to protect against rust.
7. Store in a dry place.

Remplace Immediately if damaged

WARNING

FAILURE TO FOLLOW SAFE OPERATING PROCEDURES MAY RESULT IN INJURY.

- FOR SAFE OPERATION FOLLOW ALL OPERATING INSTRUCTIONS AND SAFETY PRECAUTIONS IN OPERATOR'S MANUAL.
- EYE PROTECTION MUST BE WORN AT ALL TIMES.
- KEEP HANDS, FEET AND CLOTHING AWAY FROM POWER DRIVEN PARTS.
- STOP ENGINE BEFORE LEAVING OPERATOR POSITION.
- WAIT FOR ALL MOVEMENTS TO STOP BEFORE STARTING TO ADJUST, LUBRICATE, CLEAN OR UNCLOG THE MACHINE.
- KEEP THE AREA OF OPERATION CLEAR OF ALL PERSONS AND ANIMALS.
- KEEP ALL GUARDS AND SHIELDS IN PLACE.
- NEVER DIRECT DISCHARGE TOWARD BYSTANDERS, BUILDINGS, CARS ETC.
- ALWAYS USE A DUST MASK WHEN WORKING IN DUSTY CONDITIONS.
- KEEP PLASTIC MATERIALS AWAY FROM INTENSE HEAT AND OPEN FLAME.
- NEVER ALLOW PASSENGERS ON THE ATTACHMENT.

229

(660988)

MISE EN GARDE

NÉGLIGER DE SUIVRE LES PROCÉDURES SÉCURITAIRES D'UTILISATION PEUT ENTRAÎNER DES BLESSURES.

- POUR UNE UTILISATION SÉCURITAIRE, SUIVRE TOUTES LES INSTRUCTIONS D'UTILISATION ET PRÉCAUTIONS SÉCURITAIRES DANS LE MANUEL DE L'OPÉRATEUR.
- PORTER DES LUNETTES DE SÉCURITÉ EN TOUT TEMPS.
- GARDER MAINS, PIEDS ET VÊTEMENTS ÉLOIGNÉS DES PIÈCES MOTRICES.
- ARRÊTER LE MOTEUR AVANT DE QUITTER LA POSITION DE L'OPÉRATEUR.
- ATTENDRE QUE TOUS LES MOUVEMENTS SOIENT ARRÊTÉS AVANT D'AJUSTER, LUBRIFIER, NETTOYER OU DÉBLOQUER LA MACHINE.
- GARDER L'ENDROIT D'UTILISATION DÉGAGÉ DE TOUTES PERSONNES ET ANIMAUX.
- GARDER TOUS LES ÉCRANS PROTECTEURS EN PLACE.
- JAMAIS DIRIGER L'ÉVACUATION VERS DES PIÉTONS, BÂTIMENTS, AUTOMOBILES, ETC.
- TOUJOURS UTILISER UN MASQUE À POUSSIÈRE DANS UN ENVIRONNEMENT POUSSIÉREUX.
- GARDER TOUTES LES MATIÈRES PLASTIQUES ÉLOIGNÉES DE LA CHALEUR INTENSE ET DES FLAMMES.
- NE JAMAIS PERMETTRE DE PASSAGERS SUR CETTE MACHINE.

230

(660989)

DANGER

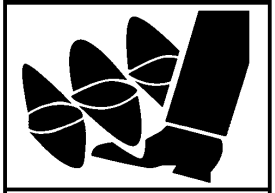

AVOID INJURY FROM ROTATING AUGER
KEEP HANDS, FEET AND CLOTHING AWAY

POUR ÉVITER DES BLESSURES GRAVES:
GARDER LES MAINS, LES PIEDS ET LES VÊTEMENTS ÉLOIGNÉS DES VIS SANS FIN

97

(656780)

DANGER

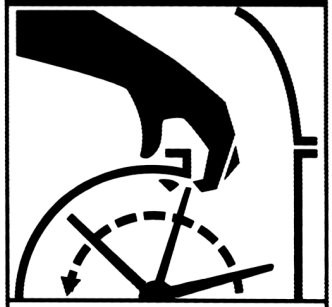

TO AVOID SERIOUS INJURY:
KEEP HANDS OUT OF THIS DISCHARGE CHUTE WHILE ENGINE IS RUNNING

POUR ÉVITER DES BLESSURES GRAVES:
GARDER LES MAINS ÉLOIGNÉES DE CETTE GOULOTTE LORSQUE LE MOTEUR EST EN MARCHE.

86

(656779)

DANGER

ROTATING DRIVELINE

CONTACT CAN CAUSE DEATH KEEP

PEOPLE AND CLOTHING WELL CLEAR

DO NOT OPERATE WITHOUT

- ALL DRIVELINE, TRACTOR AND EQUIPMENT SHIELDS IN PLACE
- DRIVELINES SECURELY ATTACHED AT BOTH ENDS
- DRIVELINE SHIELDS THAT TURN FREELY ON DRIVELINE

TRANSMISSION ROTATIVE À CARDAN

TOUT CONTACT PEUT CAUSER LA MORT

TENIR LES VÊTEMENTS ET PERSONNES À L'ÉCART

NE PAS OPÉRER SANS

- QUE TOUS LES PROTECTEURS DU TRACTEUR, DE L'ÉQUIPEMENT ET DE L'ARBRE À CARDAN SOIENT EN PLACE.
- L'ARBRE À CARDAN FIXÉ SOLIDEMENT À CHAQUE BOUT
- QUE LES PROTECTEURS TOURNENT LIBREMENT SUR L'ARBRE À CARDAN

88

(656781)

IMPORTANT
Before using:
- Oil level must be checked.
- Fill with " AGMA No 5 EP " extreme pressure oil
- Read instructions manual.

IMPORTANT
Avant usage:
- Vérifier niveau d'huile.
- Remplir avec de l'huile pour extrême pression " AGMA No 5 EP"
- Lire manuel d'instructions.

21

(655834)

SNOWBLOWER ASSEMBLY

The snowblower is assembled at the factory, however, snowblower kits must be assembled. Use the present manual and lay out all parts for assembly. Separate bolts and nuts into various sizes. After assembly, torque all the bolts according to the Torque Specification Table enclosed at the end of the manual.

Driveline Installation

1. Remove paint from snowblower gear box drive shaft and grease driveline sliding surfaces and yoke.

2. Remove the two bolts of the yoke and slide driveline yoke over drive shaft using sliding action of the driveline. Make sure the driveline is well secured to the drive shaft by replacing the two bolts and tightening them according to the torque specification table.

Detaching Snowblower from Tractor:

Select a level surface to detach. Remove driveline from the tractor's PTO. Detach top link using adjustment as required. Detach right lower link using adjustable link to assist if necessary. Detach left lower link.

IMPORTANT: To avoid damage to the snowblower, retorque all bolts after the first 10 hours of operation.

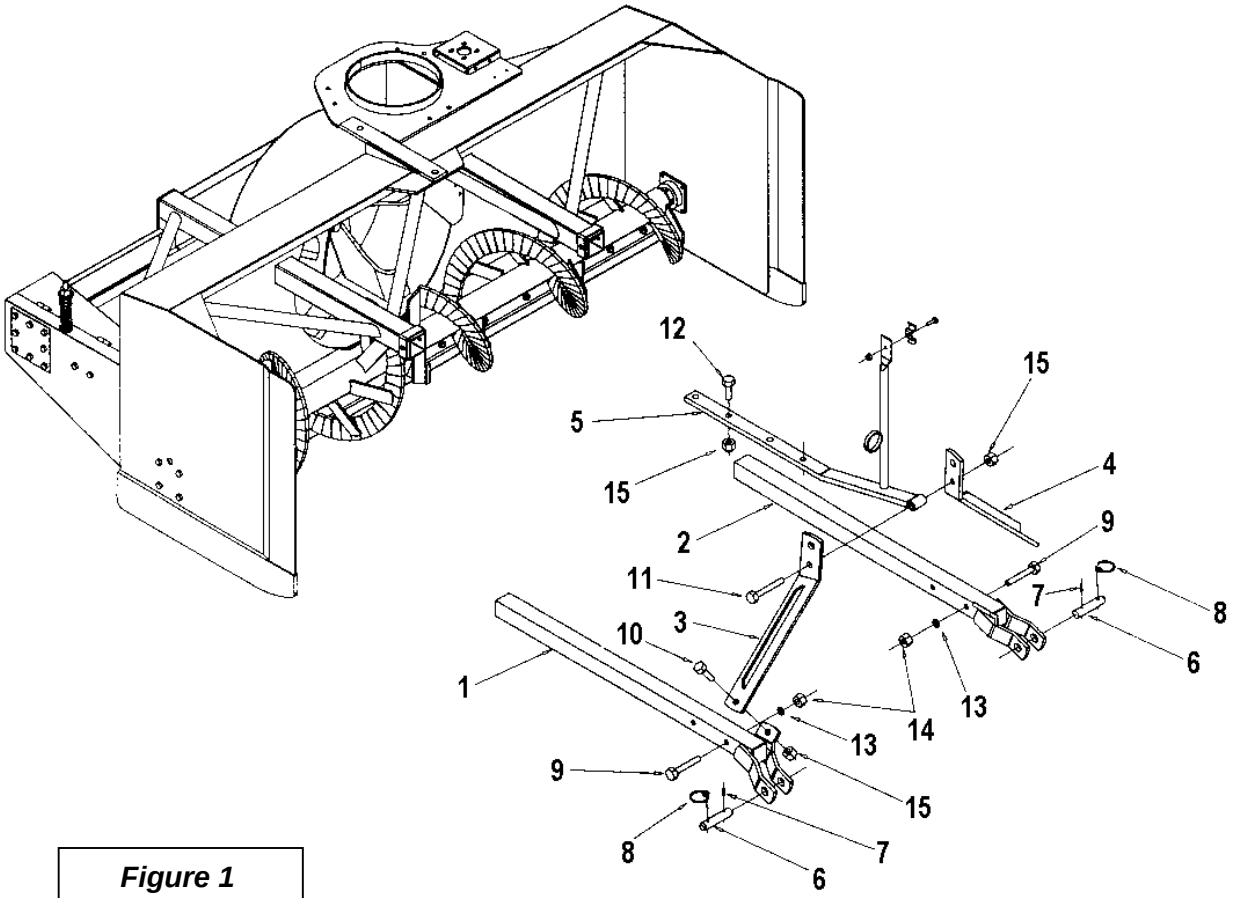

Figure 1

Three Point Hitch Installation
(Figure 1)

1. Install the lower left hitch and lower right hitch (items 1-2) on snowblower using two bolts 5/8" x 4 1/2", 3/4" lock washers and 3/4" hex nuts (items 9-13-14).

2. Install the left and the right attaching plates (items 3-4) to the lower hitches (items 1-2) using the top holes. Secure with two 3/4'' NC x 2'' bolts and 3/4"stover nuts (items 10-15).

3. Fasten each attaching plate (items 3-4) to the upper hitch (item 5) using a 3/4'' NC x 4 1/2"' bolt and a 3/4" stover nut (items 11-15).

4. Attach upper hitch (item 5) to the snowblower attaching plate (not illustrated) using two 3/4'' NC x 2 1/2'' and 3/4" stover nuts (items 12-15).

   Note: We recommend using the driveline chain when storing the snowblower.

Snowblower Installation
(Figure 1)

1. Attach tractor lower hitch arms to snowblower lower hitches (items 1-2) using the pins, the linch pins and roll pins (items 6-7-8).

2. Install the tractor upper hitch on the upper or lower hole of the snow blower attaching plates (item 3) using the tractor pins.

3. To level snowblower front to back, adjust using the tractor top link.

4. To level side to side, use leveling crank on right lower lift arm.

5. Set the tractor anti-sway turnbuckles so the snowblower does not sway. Be sure the turnbuckles clear the tractor tires.

WARNING: Before connecting snowblower driveline to tractor drive shaft, make sure driveline is not too long in raised, lowered or middle position. If the driveline is too long it must be shortened, to avoid damage to tractor.

6. Connect driveline to tractor drive P.T.O., making sure the driveline is well secured to the tractor.

7. Secure driveline safety chain to tractor master shield to prevent driveline shield from rotating.

Note: Depending on tractor used, it may be necessary to install front tractor weights to maintain front-end stability.

Hydraulic Rotation by Motor
(Figure 2)

1. Position the gear (item 2) on the chute base (item 1). The section without teeth and the chute discharge should be in the same direction, as shown on the illustration. Secure with 5/16'' x 1'' bolts, lock washers and nuts (item 11-12-13).

2. Wind into a circle the anti-friction strip (item 3) and place it at the base of the chute. Place the anti-friction ring (item 4) around the welded ring located on top of the snowblower.

3. Install the spacers (item 5) and the retaining plates (item 6) on the chute base. Secure with six 1/2'' x 2'' bolts, lock washers and nuts (items 14-15-16).

4. Fasten the motor (item 8) using four 3/8'' x 1'' bolts, lockwashers and flatwashers (items 18-19-20). Tighten all bolts according to the "Torque Specification Table" at the end of this manual.

5. Place the gear of the motor (item 7) on the top of the motor, with hub facing down. Fasten the gear in place with a 1/4" NC x 1" bolt and a 1/4" lockwasher (items 21-22). Tighten firmly. To avoid knocking of the two gears during rotation, adjust the distance between the two gears

6. Attach the hydraulic rotation cover (item 10) using two 1/4" x 1" bolts, flatwashers, lockwashers and nuts (items 26-27-28-29).

7. Install the cushion valve (item 9) with two 1/4" x 2" bolts, lockwashers and nuts (items 23-24-25).

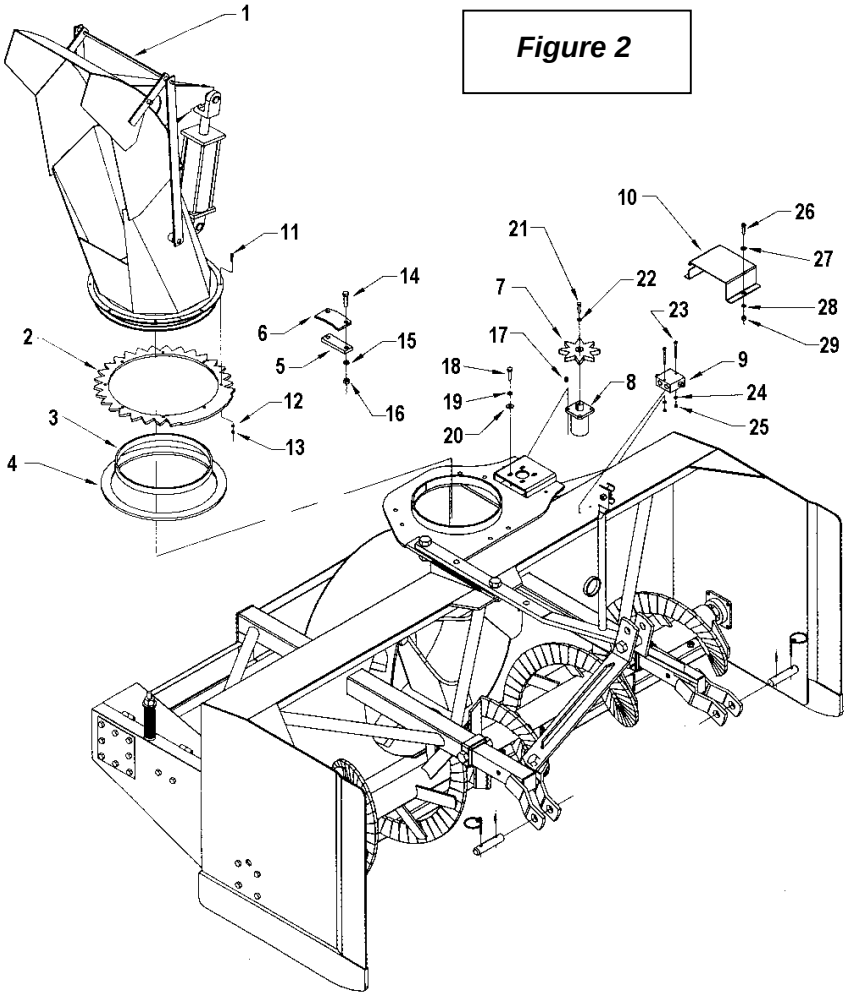

Figure 2

Rear Hydraulic Blade 8106 Installation (Optional) (Figure below)

1. Install the chosen cutting edge (items 5 or 6) between the blade (item 1) and the support bracket (item 7) with ten 1/2" x 2 1/2" carriage bolts, loc washers and nuts (items 8-9-10).
2. Attach the blade (item 1) to the snowblower, running the cylinders under the snowblower reinforcements, using four 5/8" x 2 1/2" bolts and stover nuts (items 3-4).
3. **Make sure that the cylinder ports (item 11) are facing the outside before attaching.**

Adjustment of Tivar Cutting Edge for Rear Hydraulic Blade

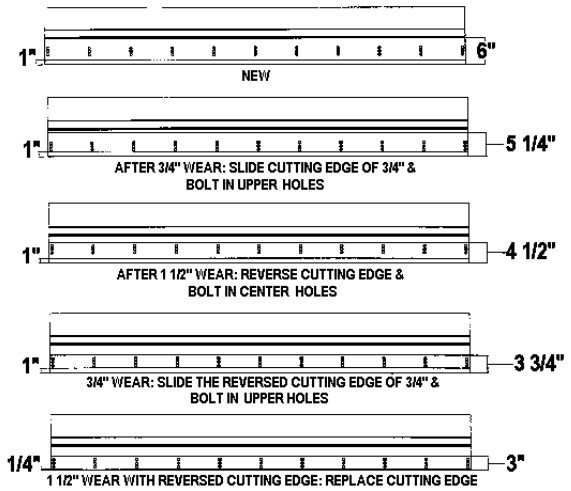

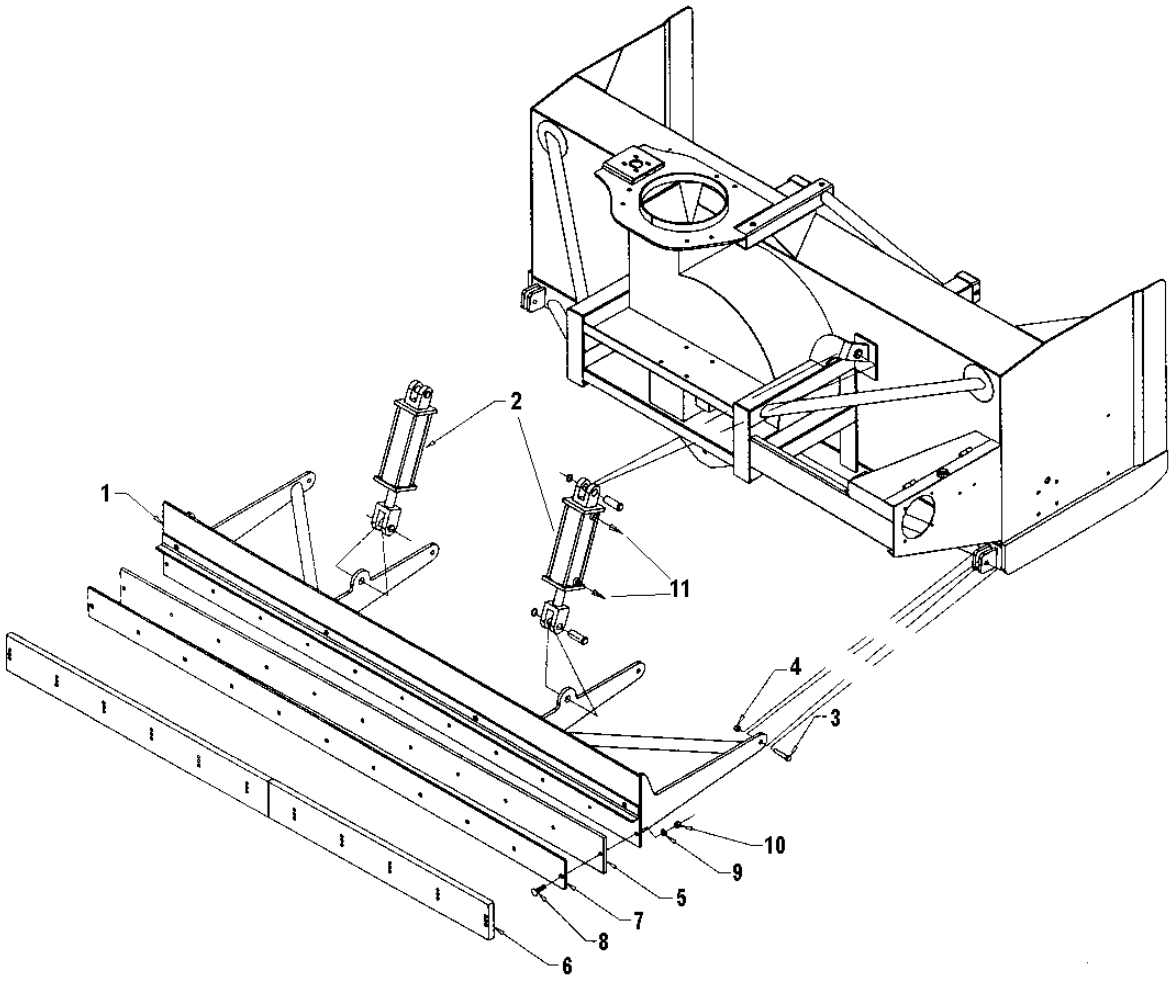

OPERATION

GENERAL PREPARATION

1. Read the operator's manual carefully before using the tractor and snow blower. Be thoroughly familiar with the controls and proper use of the equipment. Know how to stop the unit and disengage the controls quickly.

2. Make sure the snowblower is clear of snow before engaging the driveline.

3. Make sure the auger and fan operate freely.

4. Check the oil level in the worm gear box and if necessary, add 90 SAE gear oil.

5. Check the three shear bolts, one on each auger section and one between the fan and gearbox for proper tightness.

6. Adjust so that the snowblower skid shoes run level.

7. Wear adequate winter outer garments while operating equipment.

OPERATING CONTROLS

Raising and Lowering the Snowblower

Move the three point lever on right hand side of seat down or forward to lower, and up or rearward to raise.

Drive Shaft Operation

The mid drive shaft is activated by pulling up the drive shaft lever on left side of seat. Push down to disengage.

WARNING: To avoid personal injury, be sure the tractor engine is off, the drive shaft disengaged, and all movement has stopped before making any adjustments.

Deflector Adjustment

Set the angle of deflection according to the distance the snow must be thrown. To set the deflector angle, loosen the two deflector knobs, adjust the deflector to the appropriate angle, and retighten the two knobs securely.

Work and Travel Speed

Working ground speed will depend on the depth and density of the snow to be cleared. Normally, ground speed will range from 4 to 7 MPH for light, dry snowfalls 3 to 6 inches, and 1 to 3 MPH for heavy, wet or drifted snow. To transport, disengage the driveshaft and raise the snowblower to full transport height.

SNOW REMOVAL METHODS

When removing snow, do not use the snowblower as a dozer blade to push snow. Let the snowblower work its way through deep drifts. If the speed of your tractor is too fast, the snowblower may become overloaded and clog. For best results, raise the snowblower and remove a top layer of snow. A second pass with the snowblower will remove the remaining snow.

IMPORTANT : Use full RPM power when removing wet, sticky snow. Low RPM power will tend to clog the chute.

WARNING: Do not use hands or feet to unclog chute. Do not attempt to clear clogged chute of snow while tractor engine is running. If the chute clogs, disengage the drive shaft, shut off the tractor engine, remove the ignition key, wait for all movement to stop, and then clear the snow from the chute.

A definite pattern of operation is required to thoroughly clean the snow area. These patterns will avoid throwing snow in unwanted places as well as eliminating a second removal of snow

PATTERN 1

DISCHARGE SNOW BOTH SIDES

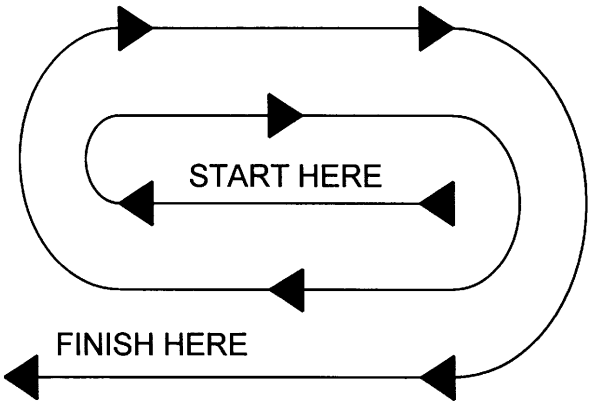

Where it is possible to throw the snow to the left and right (above), as on a long driveway, it is advantageous to start in the middle. Plow from one end to the other, throwing snow to both sides without changing the direction of the discharge guide

PATTERN 2

DISCHARGE SNOW THIS SIDE ONLY

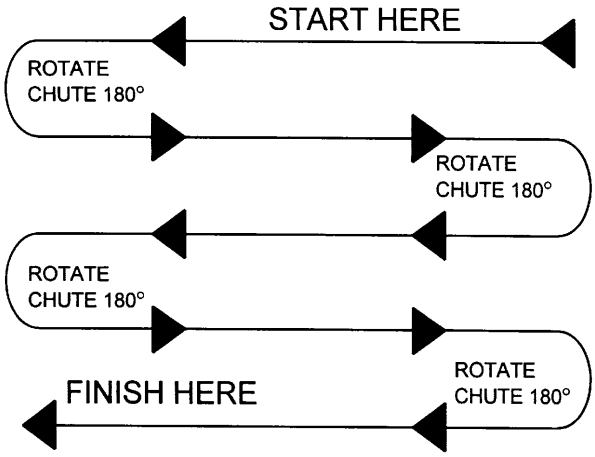

If the snow can only be thrown to one side of the driveway or sidewalk (above), start on the opposite side. At the end of the first pass, rotate the discharge guide 180 degrees for the return pass. At the end of each succeeding pass, rotate the discharge guide 180 degrees to maintain direction of throw in the same area.

MAINTENANCE

Tire Pressure:

1. Inflate front wheel tires to 26-27 psi.
2. Inflate rear wheel tires to 6-7 psi.

Storage

1. Check the shear bolts at frequent intervals for proper tightness to be sure the blower is in safe working condition.
2. Never store the tractor with fuel in the fuel tank inside a building where open flame or sparks are present. Allow the engine to cool before storing in any enclosure.
3. Run the snow blower a few minutes after blowing snow to prevent freeze up of the auger and the impeller.
4. Provide adequate blocking before working under the snow blower when in the raised position.

Lubrication

1. **GEAR** : Check the oil level in the worm gear drive every month. If necessary add SAE 90 gear oil.
2. **AUGER SECTIONS** : Grease the fitting on each auger sections every 24 hours of operation or once a year.
3. **REDUCTION CHAIN** : Lubricate with chain saw lubricant every 4 hours of operation and after each use.
4. **ROTATION SHAFT** : Grease the shaft each 8 hours of operation.
5. **DRIVELINE (S)** : Grease each u- joint fitting every 8 hours of operation. Slide drive shaft apart and coat sliding surfaces with grease every 8 hours of operation.
6. **DOUBLE CHAIN IDLER SECTIONS:** Grease the areas of the mechanism that have a grease fitting every 24 hours.

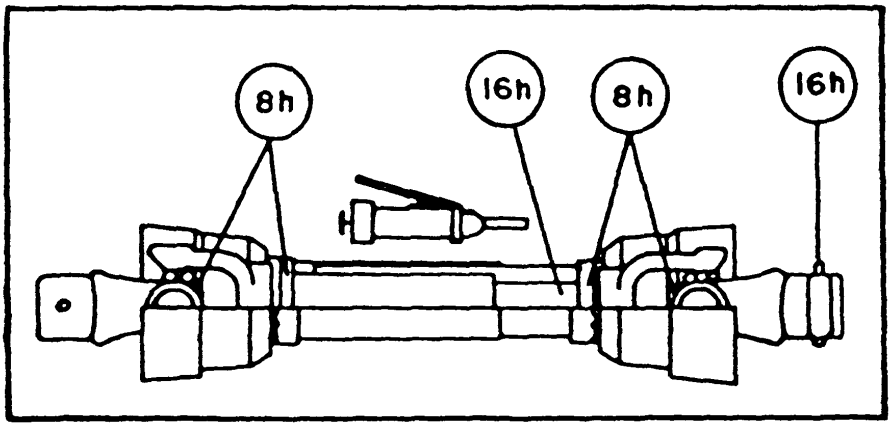

PARTS

INTRODUCTION

All parts are illustrated in "exploded views" which show the individual parts in their normal relationship to each other. Reference numbers are used in the illustrations. These numbers correspond to those in the "Reference Number" (REF) column, and are followed by the description and quantity required.

O/L - "Obtain Locally" in the part number column indicates common hardware that is available at your local hardware supply.

All reference to right and left, forward or rearward, are from the operator's seat, facing the steering wheel.

Orders must give the complete description, correct part number, the total amount required, the serial number, the method of shipment and the shipping address.

The manufacturer reserves the rights to change, modify, or eliminate from time to time, for technical or other reasons, certain or all data, specifications, or the product or products themselves, without any liability or obligation.

SNOWBLOWER SA92I

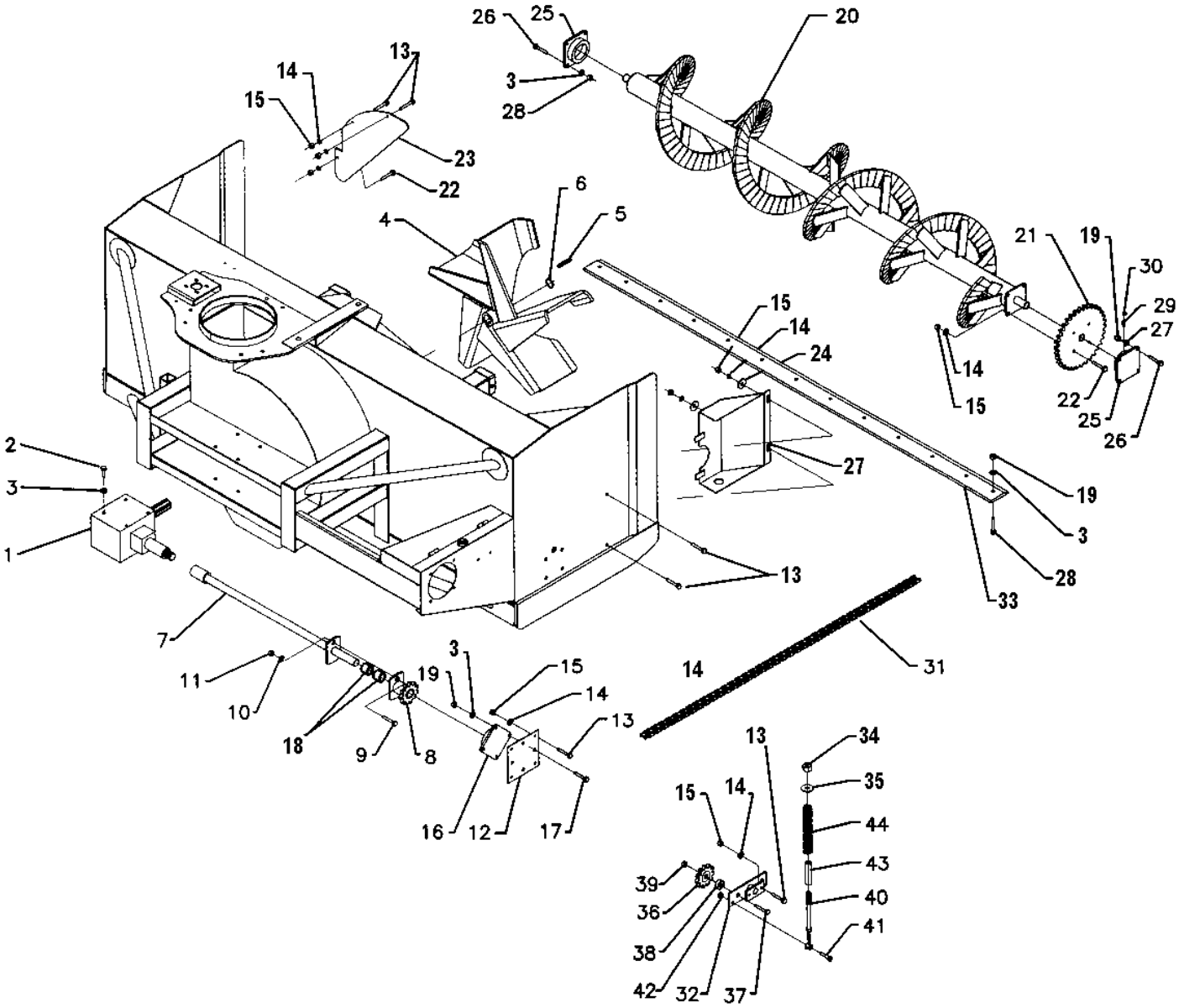

SNOWBLOWER SA92I

REF.	DESCRIPTION	QTY.	PART #
1	Gear box assembled	1	665459
2	Bolt hex. (1/2" NC x 1")	8	O/L
3 Loc	kwasher 1/2"	33	O/L
4 Fan		1	665521
5	Key (3/8" x 3/8" x 2 3/4" lg)	1	654174
6 Ret	aining ring	1	665253
7 Dr	ive shaft	1	665249
8 Shea	r plate	1	655960
9	Bolt hex. (5/16" NC x 2") gr.5	1	O/L
10 Loc	kwasher 5/16"	1	O/L
11	Nut hex.(5/16" NC)	1	O/L
12 Dr	ive support	1	662687
13	Bolt hex. (3/8" NC x 1")	10	O/L
14 Loc	kwasher 3/8"	15	O/L
15	Nut hex.(3/8" NC)	15	O/L
16	Bearing (1 1/4" dia. hole)	1	662030
17	Bolt hex. (1/2" NC x 1 1/2")	4	O/L
18 Ny	lon ring	2	655347
19	Nut hex.(1/2" NC)	4	O/L
20 Scr	ew	1	665207
21	Sprocket #80A24 (1 1/4" dia. hole)	1	665268
22	Bolt hex. (3/8" NC x 1 1/4")	5	O/L
23 Res	triction plate	1	665309
24	Flatwasher 7/16" dia. hole	2	O/L
25	Bearing (1 1/4" dia. hole)	2	654082
26	Bolt hex. (1/2" NC x 1 1/2")	8	O/L
27 Fr	ont guard	1	665282
28	Plow bolt 1/2" NC x 1 1/2"	13	O/L
29 Gr	ease fitting extension	1	662303
30	Grease fitting 1/4" NF @ 90°	1	658566
31 Chain	(#80HC)	1	665286
32	Double chain idler	1	665281
33 Cutt	ing edge	1	665239
34	Stover nut hex. 5/8" NC	1	O/L
35	Flatwasher 11/16" dia. hole	1	O/L
36	Idler sprocket #80A11	2	654756
37	Bolt hex. (3/4" NC x 2 1/4")	2	O/L
38	Idler spacer 9/16"	2	662046
39	Stover nut hex. (3/4" NC)	2	O/L
40 I	dler lever	1	665204
41	Shoulder screw 1/2" x 3/4" (3/8" NC)	1	664577
42	Stover nut hex. (3/8" NC)	1	O/L
43 Spr	ing guide- idler	1	664841
44 Com	pression spring	1	664876

THREE POINT HITCH

REF.	DESCRIPTION	QTY	PART #
1	Right hitch	1	665059
2	Left hitch	1	665058
3	Right flat bar	1	665061
4	Left flat bar	1	665060
5	Upper hitch	1	665079
6	Pin CAT. 2	2	655813
7	Roll pin 1/4" dia. x 1 3/4" lg	2	O/L
8	Linch pin 7/16" dia.	2	O/L
9	Bolt hex. 5/8" NC x 2"	2	O/L
10	Bolt hex. 3/4" NC x 2"	2	O/L
11	Bolt hex. 3/4" NC x 4 1/2"	3	O/L
12	Lockwasher 5/8"	2	O/L
13	Nut hex. 5/8"NC	2	O/L
14	Stover nut hex. 3/4" NC	5	O/L
15	Double support bracket	1	665287
16	Bolt hex. 3/8" NC x 1"	1	O/L
17	Stover nut hex. 3/8" NC	1	O/L

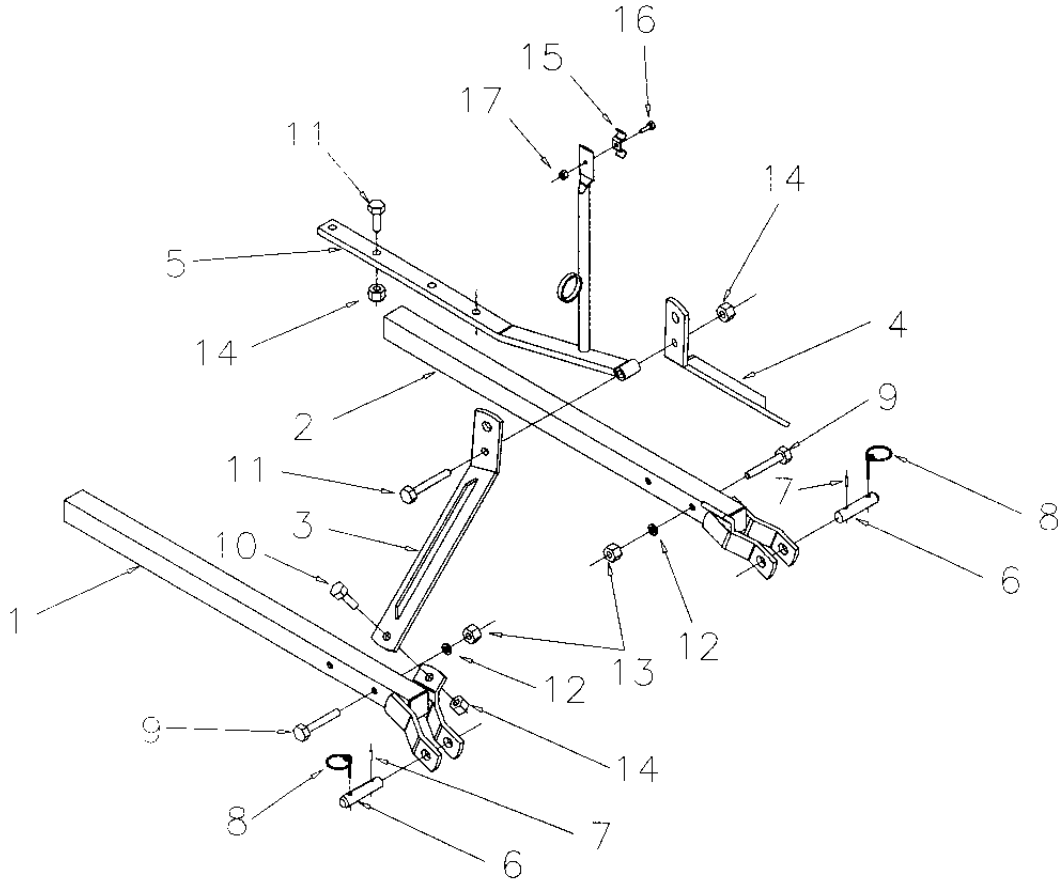

CHUTE SEMI-INDUSTRIAL – 9492

REF.	DESCRIPTION	QTY.	PART #
1	Deflector	1	662652
2	Center deflector	1	662651
3	Chute base	1	662655
4	Upper hinge pin	1	662654
5	Lower hinge pin	1	662625
6	Adjustment pin	1	662653
7	Cotter pin 1/8" dia. X 1"	6	O/L
8	Cotter pin 3/16" dia. X 1 1/2"	2	O/L
9	Flat bar	2	654895
10	Flatwasher 1/2" dia. hole	6	O/L
	Assembled on chute: Cylinder and pins 3"x8"	1	654129

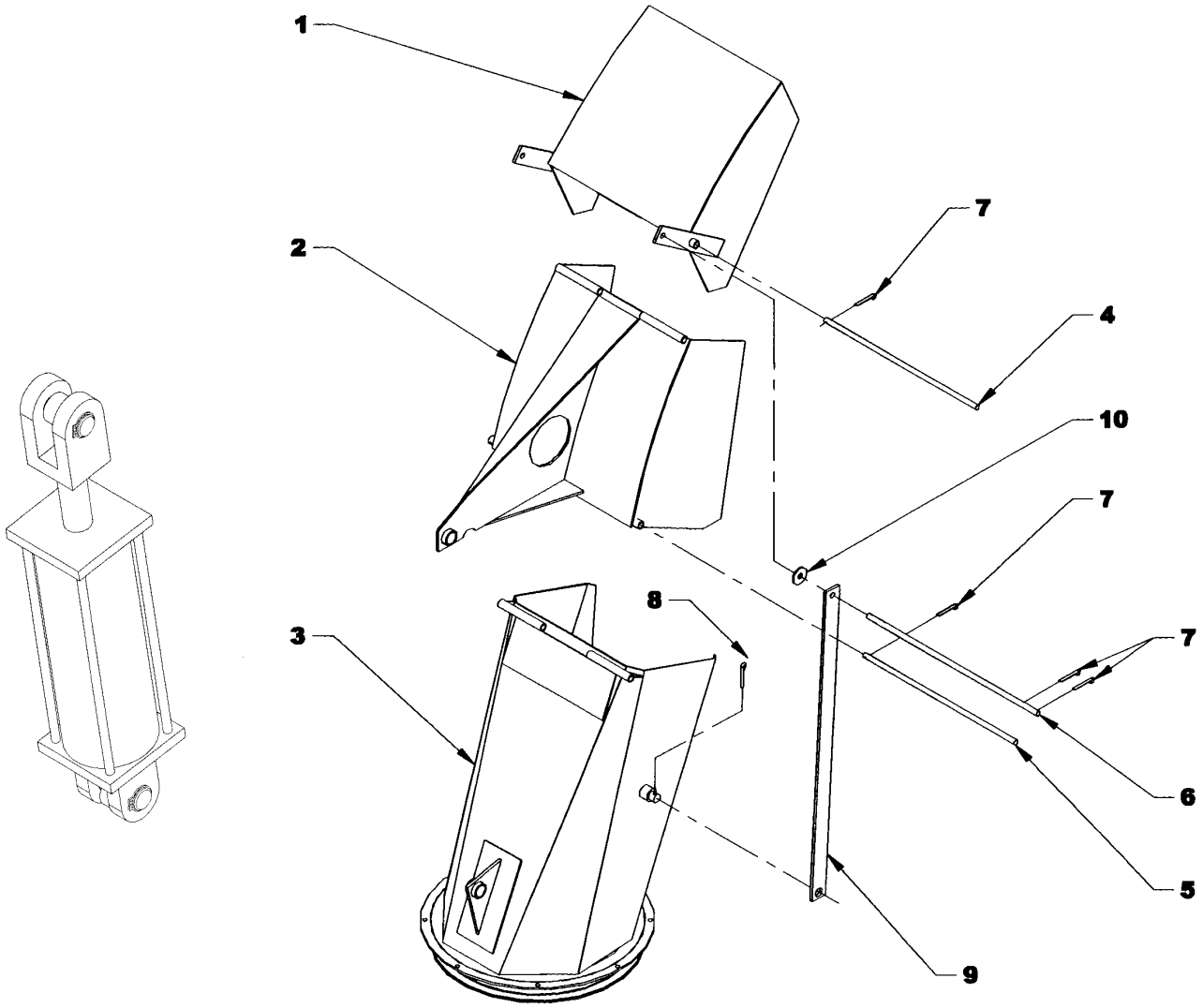

HYDRAULIC ROTATION

REF.	DESCRIPTION	QTY	PART #
1	Chute gear	1	665077
2	Anti-friction strip 1/4" x 1"	1	662261
3	Anti-friction ring 1/4" x 15" dia.	1	661987
4	Plate spacer	3	662263
5	Retaining plate	3	662262
6	Motor gear	1	662272
7	Hydraulic motor with key	1	662448
8	Cushion valve	1	664999
9	Hydraulic rotation cover	1	665288
10	Bolt hex. 5/16" NC x 1"	10	O/L
11	Lock washer 5/16"	10	O/L
12	Nut hex. 5/16" NC	10	O/L
13	Bolt hex. 1/2" NC x 2"	6	O/L
14	Lock washer 1/2"	6	O/L
15	Nut hex. 1/2" NC	6	O/L
16	Bolt hex. 3/8" NC x 1"	4	O/L
17	Lockwasher 3/8"	4	O/L
18	Flatwasher 7/16" dia. hole	4	O/L
19	Bolt hex. 1/4"NC x 1"	3	O/L
20	Lock washer 1/4"	5	O/L
21	Bolt hex 1/4" NC x 2"	2	O/L
22	Flatwasher 5/16" dia. hole	2	O/L
23	Nut hex. 1/4" NC	4	O/L

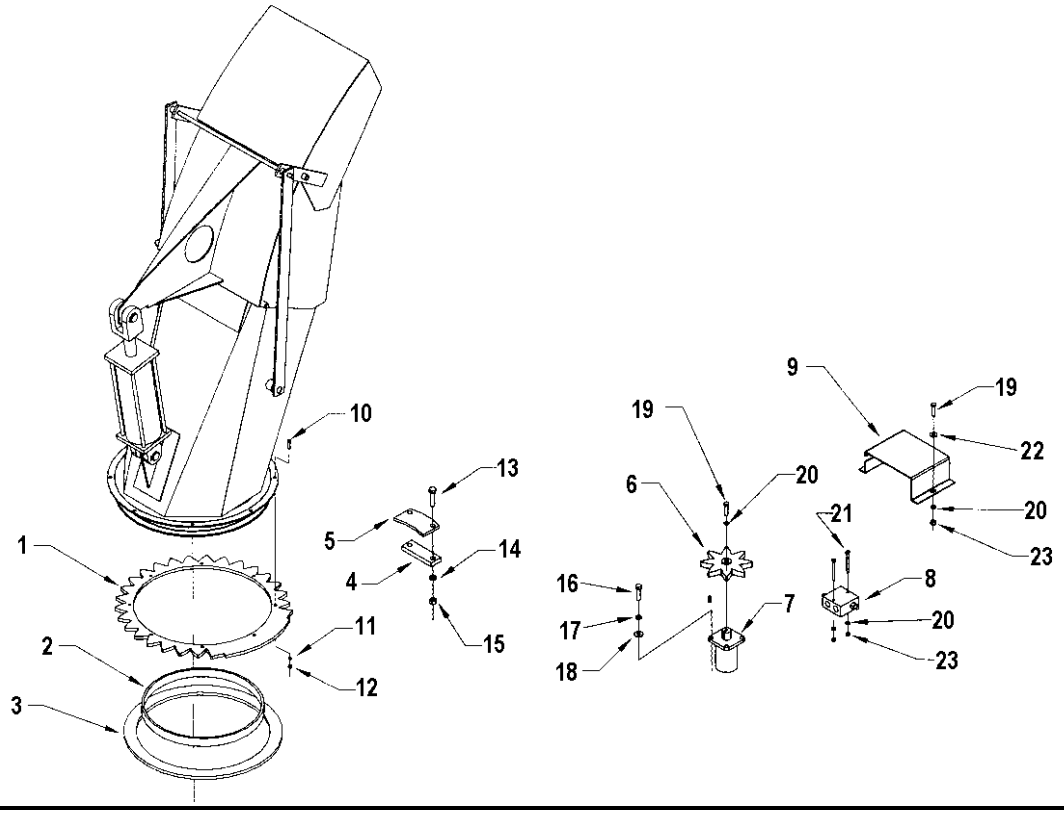

GEARBOX - 665459

REF.	DESCRIPTION	QTY	PART #
1	Housing	1	656640
2	Grommet	1	656650
3	Exterior retaining ring	1	656652
4	Spacer	2	656649
5	Bearing	1	656653
6	Spacer	1	656648
7	Interior retaining ring	1	656654
8	Bearing	1	656647
9	Shaft	1	656651
10	Gear	1	656645
11	Exterior retaining ring	1	656646
12	Bearing	2	656641
13	Spacer	1	656644
14	Interoir retaining ring	2	656642
15	Seal	2	656643
16	Shaft	1	665006
17	Gear	1	656657
18	Spacer	1	656655
19	Plug	1	656662
20	Cover	1	656660
21	Bolt hex. M10 x 14	4	656659
22	Plug 3/8" NPT	2	656259
23	Cap	1	664132

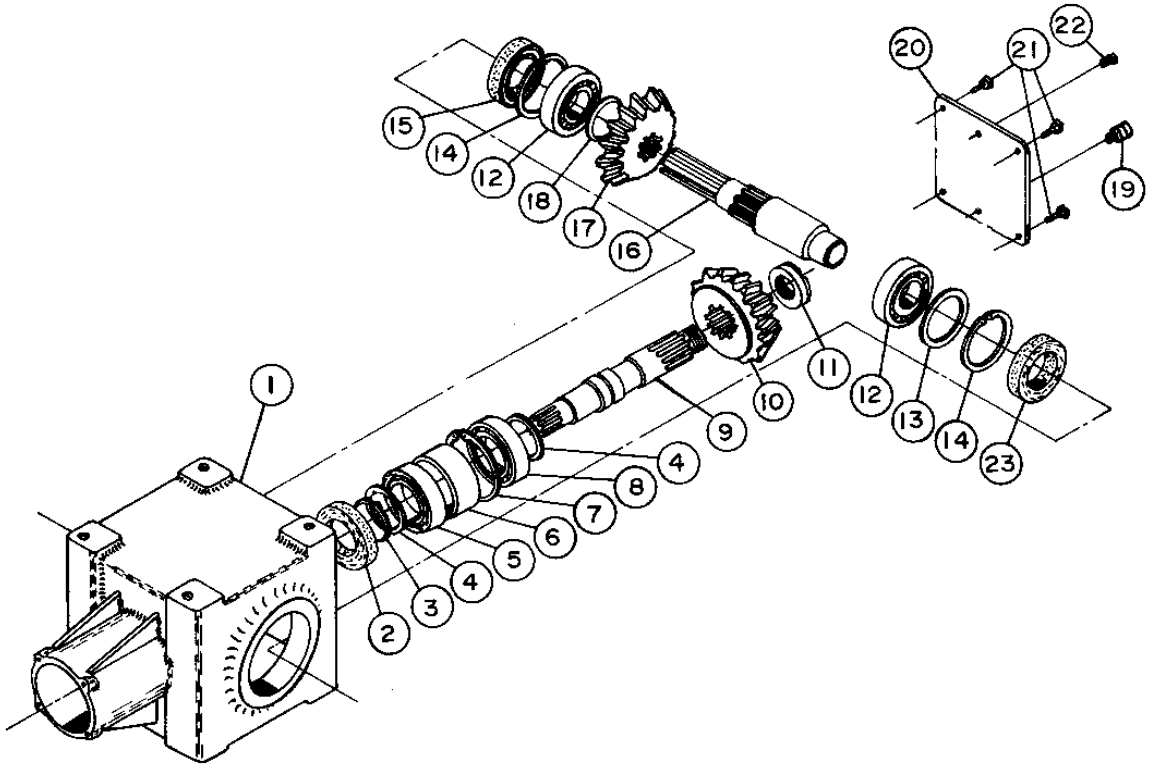

DRIVELINE –665227

REF.	DESCRIPTION	QTY	PART #
1	Yoke ass'y	1	663133
2	Universal joint	2	663134
3	Yoke for female tube	1	663136
4	Female tube	1	665531
5	Male tube	1	665532
6	Yoke for male tube	1	663144
7	Yoke and hub ass'y	1	663145
8	Bolt and nut	2	662199
9	Grease fitting	1	663148
10	Ball 5/16"	24	663162
11	Shear bolt and nut	1	663149
12	Protector and chain	1	665533
13	Safety pin	1	663151

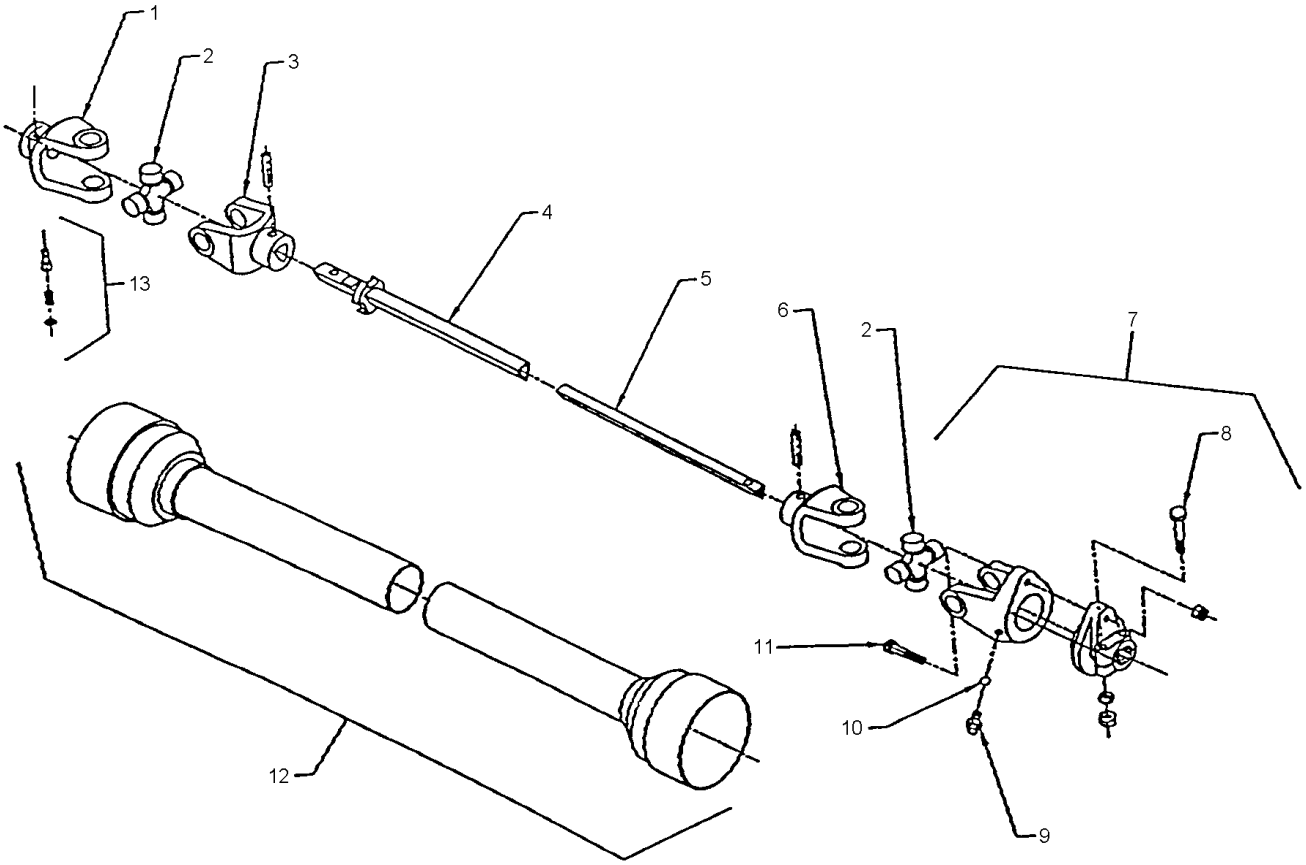

REAR HYDRAULIC BLADE 8106 (OPTION)

REF.	DESCRIPTION	QTY.	PART #
1 Rear	blade	1	665278
2	Cutting edge support bracket	1	665280
3	Carriage bolt 1/2" NC x 1 1/2"	10	O/L
4 Lock	washer 1/2"	10	O/L
5	Hex. nut 1/2" NC	10	O/L
6	Hex. bolt 5/8" NC x 2 1/2"	4	O/L
7	Stover nut 5/8" NC	4	O/L
8	Cylinder and pins 3" x 8"	2	654129
9	**Steel cutting edge optional**	1	**8123**
10	**Tivar cutting edge optional (2 sections)**	1	**8124**

***O/L = Obtain Locally**

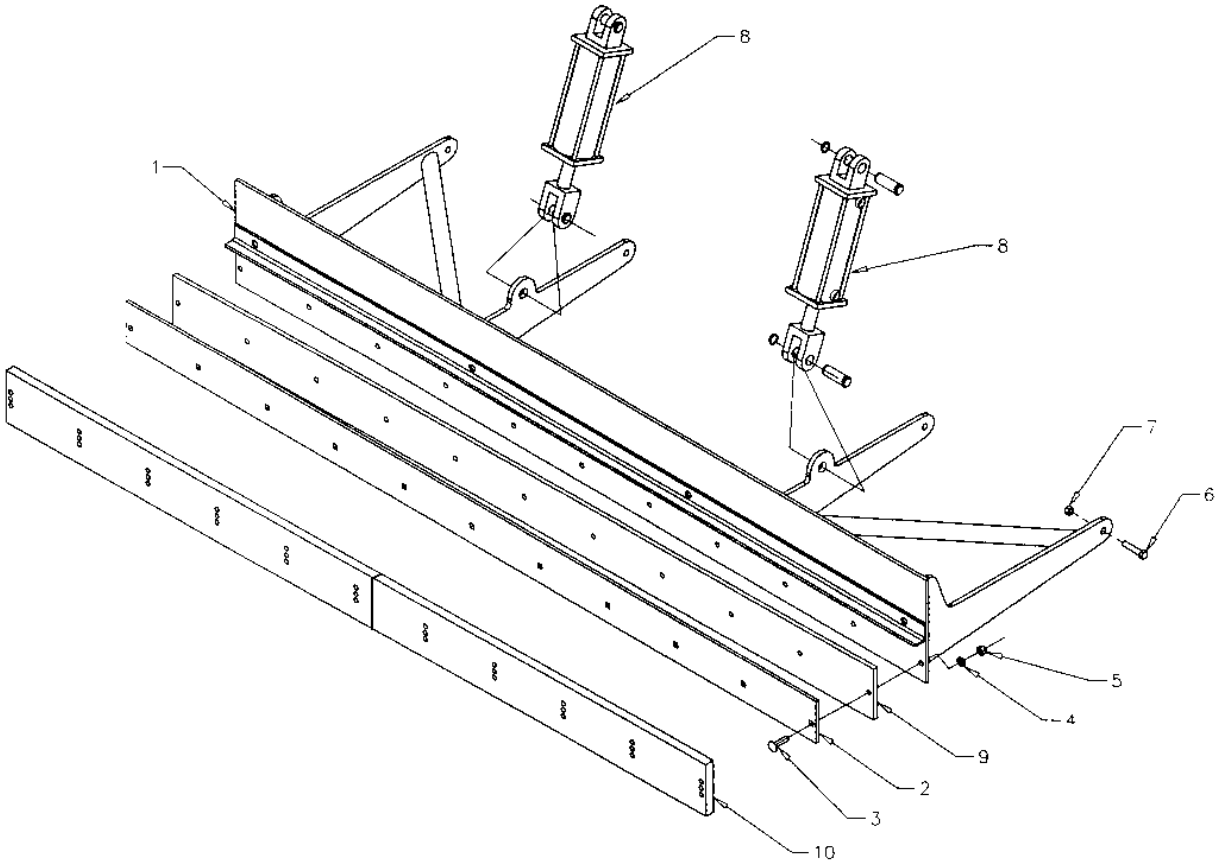

RAD TECHNOLOGIES INC.

RAD TECHNOLOGIES INC. warrants to the original buyer that the equipment is free from defects in material and workmanship. RAD TECHNOLOGIES INC.'s obligation, under this warranty, will be limited to the repair or replacement of any non-wear part or component, which RAD TECHNOLOGIES INC. finds to be defective within **one year** from the date of original purchase (unless otherwise-specified). The applicable warranty period for commercial or rental use shall be ninety (90) days from the date of purchase

In no event shall RAD TECHNOLOGIES INC. be liable for consequential, special, direct or indirect damages incurred by the buyer/user.

All components not manufactured by RAD TECHNOLOGIES INC. (such as motors, actuators, hydraulic components, tires, ...etc.) are covered by the original manufacturer's warranty in conjunction with RAD TECHNOLOGIES INC.

RAD's obligation under this warranty shall be limited to repairing or replacing, free of charge to the original purchaser, any part that, in RAD's judgment, shall show evidence of such defect, provided the **distributor** returns the part prepaid within thirty (30) days from date of failure.

This warranty shall not be interpreted to render RAD TECHNOLOGIES INC. liable for injuries or damages of any kind or nature to person or property. This warranty does not extend to losses because of delays, or to any expenses or losses incurred for labor, substitute machinery, rental or for any other reason.

Except as set forth above, RAD TECHNOLOGIES INC. shall have no obligation or liability of any kind on account of any of its equipment and shall not be liable for special or consequential damages. RAD TECHNOLOGIES INC. makes no other warranty, expressed or implied, and specifically, RAD TECHNOLOGIES INC. disclaims any implied warranty or merchantability or fitness for a particular purpose**. Some states or provinces do not permit limitations or exclusions of implied warranties or incidental or consequential damages, so the limitations or exclusions in this warranty may not apply.**

This warranty is subject to any existing conditions of supply, which may directly affect our ability to obtain materials or manufacture replacement parts. RAD TECHNOLOGIES INC. reserves the right to make improvements in design or changes in specifications at any time, without incurring any obligation to owners of units previously sold.

No one is authorized to alter, modify or enlarge this warranty nor the exclusions, limitations and reservations.

2835 Chemin de l'Aéroport, Thetford Mines (Québec) G6G 5R7
Tél.: (418) 338-4499 Fax: (418) 388-6090
Internet: www.radinter.com EMAIL: radtech@radinter.com

TORQUE SPECIFICATION TABLE

GENERAL SPECIFICATION TABLE

Use the following torques when special torques are not given

NOTE: These values apply to fasteners as received from supplier, dry, or when lubricated with normal engine oil. They do not apply if special graphited or moly sidulphide greases or other extreme pressure lubricants are used. This applies to both UNF and UNC threads.

SEE Grade No.		2				5				8			
BOLT HEAD IDENTIFICATION MARKS AS PER GRADE NOTE: MANUFACTURING MARKS WILL VARY.													
		Torque				Torque				Torque			
BOLT SIZES		Pounds-Foot		Newtons-Meter		Pounds-Foot		Newtons-Meter		Pounds-Foot		Newtons-Meter	
Inches	Millimeters	MIN.	MAX.	MIN.	MAX.	MIN.	MAX.	MIN.	MAX.	MIN.	MAX.	MIN.	MAX.
1/4	6.35	5	6	6.8	8.13	9	11.0	12.2	14.9	12	15	16.3	30.3
5/16	7.94	10	12	13.6	16.3	17	20.5	23.1	27.8	24	29	32.5	39.3
3/8	9.53	20	23	27.1	31.2	35	42.0	47.5	57.0	45	54	61.0	73.2
7/16	11.11	25	30	40.7	47.4	54	64.0	73.2	86.8	70	84	94.9	113.9
1/2	12.70	45	52	61.0	70.5	80	96.0	108.5	130.2	110	132	149.2	179.0
9/16	14.29	65	75	88.1	101.6	110	132.0	149.2	179.0	160	192	217.0	260.4
5/8	15.88	95	105	128.7	142.3	150	180	203.4	244.1	220	264	298.3	358.0
3/4	19.05	150	185	203.3	250.7	270	324	366.1	439.3	380	456	515.3	618.3
7/8	22.23	160	200	216.8	271.0	400	480	542.4	650.9	600	720	813.6	976.3
1	25.40	250	300	338.8	406.5	580	696	786.5	943.8	900	1080	1220.4	1464.5
1 1/8	25.58	-	-	-	-	800	880	1084.8	1193.3	1280	1440	1735.7	1952.6
1 1/4	31.75	-	-	-	-	1120	1240	1518.7	1681.4	1820	2000	2467.9	2712.0
1 3/8	34.93	-	-	-	-	1460	1680	1979.8	2278.1	2380	2720	3227.3	3688.3
1 1/2	38.10	-	-	-	-	1940	2200	2630.6	2983.2	3160	3560	4285.0	4827.4

METRIC BOLT TORQUE SPECIFICATIONS

		Coarse thread					Fine Thread				
Size of screw	Grade No.	Pitch (mm)	Pounds-Foot MIN.	Pounds-Foot MAX.	Newtons-Meter MIN.	Newtons-Meter MAX.	Pitch (mm)	Pounds-Foot MIN.	Pounds-Foot MAX.	Newtons-Meter MIN.	Newtons-Meter MAX.
M6	4T 7T 8T	1.0	3.6 5.8 7.2	5.8 9.4 10	4.9 7.9 9.8	7.9 12.7 13.6	-	- - -	- - -	- - -	- - -
M8	4T 7T 8T	1.25	7.2 17 20	14 22 26	9.8 23 27.1	19.0 29.8 35.2	1.0	12 19 22	17 27 31	16.3 25.7 29.8	23.0 36.6 42
M10	4T 7T 8T	1.5	20 34 38	25 40 46	27.1 46.1 51.5	33.9 54.2 62.3	1.25	20 35 40	29 47 52	27.1 47.4 54.2	39.3 63.7 70.5
M12	4T 7T 8T	1.75	28 51 57	34 59 66	37.9 69.1 77.2	46.1 79.9 89.4	1.25	31 56 62	41 68 75	42 75.9 84	55.6 92.1 101.6
M14	4T 7T 8T	2.0	49 81 96	56 93 109	66.4 109.8 130.1	75.9 126 147.7	1.5	52 90 107	64 106 124	70.5 122 145	86.7 143.6 168
M16	4T 7T 8T	2.0	67 116 129	77 130 145	90.8 157.2 174.8	104.3 176.2 196.5	1.5	69 120 140	83 138 158	93.5 162.6 189.7	112.5 187 214.1
M18	4T 7T 8T	2.0	88 150 175	100 168 194	119.2 203.3 237.1	136 227.6 262.9	1.5	100 177 202	117 199 231	136 239.8 273.7	158.5 269.6 313
M20	4T 7T 8T	2.5	108 186 213	130 205 249	146.3 252 288.6	176.2 277.8 337.4	1.5	132 206 246	150 242 289	178.9 279.1 333.3	203.3 327.9 391.6

Manufactured by:

RAD Technologies Inc.
2835, Chemin de l'Aéroport
Thetford Mines, Québec, Canada, G6G 5R7
Tel.: (418) 338-4499 - Fax.: (418) 338-6090
E-mail : radtech@radinter.com
Internet : www.radinter.com

Printed in Canada